LONG SEAMS

COURSE	ORIENTATION	ORIENTATION
1(TOP)	120°	300°
2	124°	304°
3	120°	300°
4	124°	304°
5	120°	300°
6	124°	304°

*VERT – TOP TO BOTTOM

Ship loose items:△1
(6) SHIM PLATES

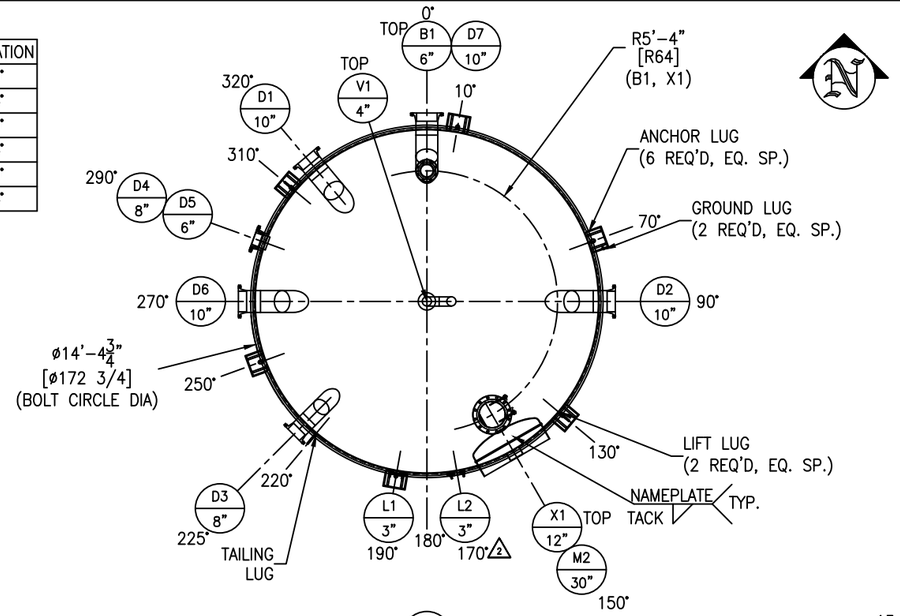

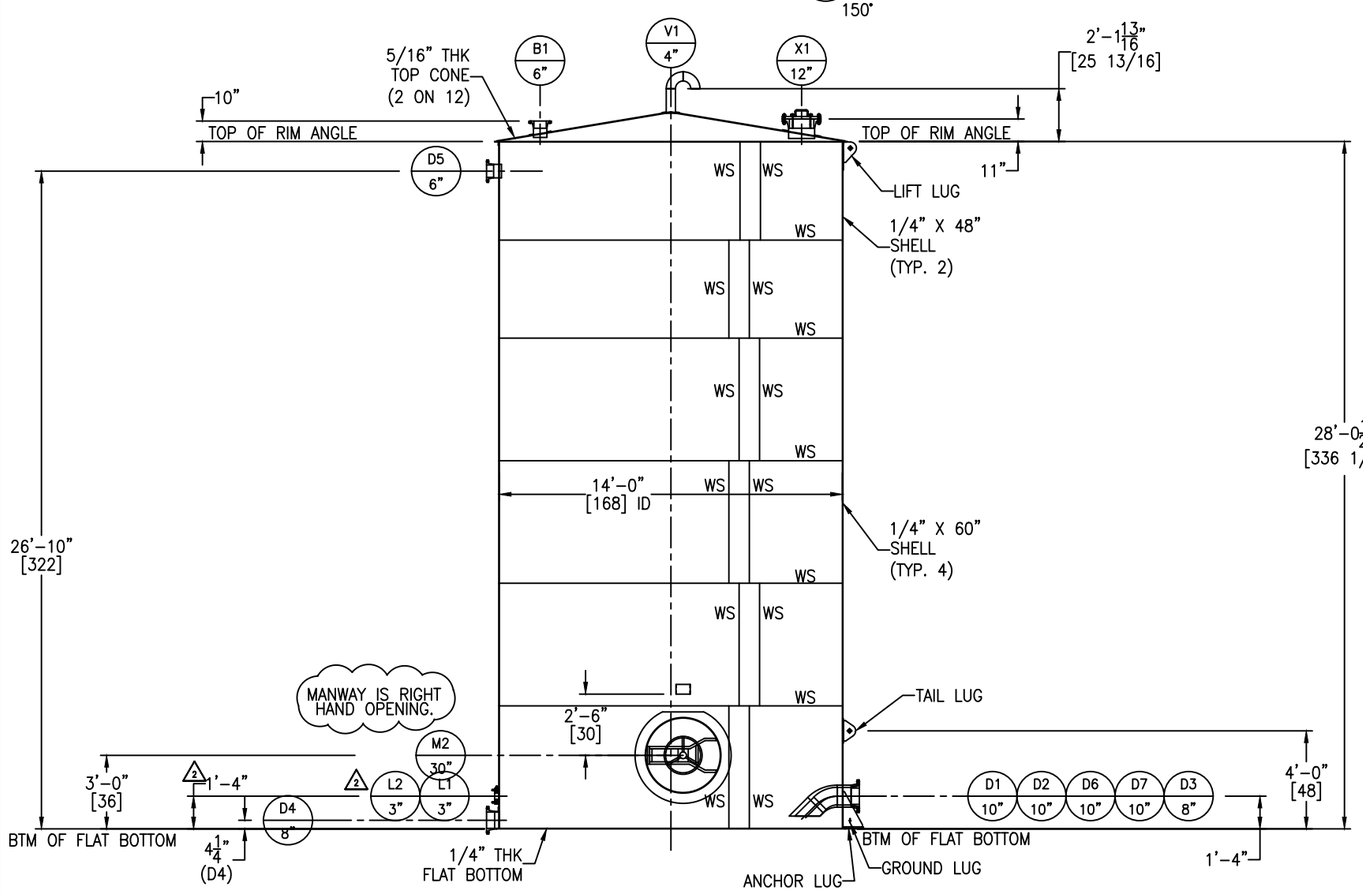

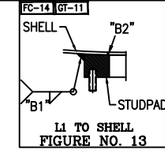

L1 TO SHELL
FIGURE NO. 13

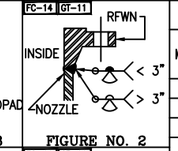

FIGURE NO. 2

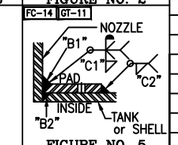

FIGURE NO. 5

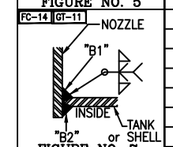

FIGURE NO. 7

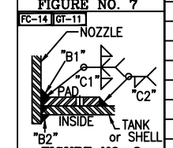

FIGURE NO. 8

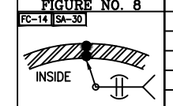

SHELL THK. < 5/16"

FIGURE NO. 9

NOZZLE SCHEDULE

MARK	SERVICE	SIZE	RATING	TYPE / STYLE	NECK SCHED.	PROJECTION EXT. (℄)	PROJECTION INT. (MIN.)	WELD FIGURE	REPAD SIZE (WIDTH X THK.)	WELD SIZE "A1"	"A2"	"B1"	"B2"	"C1"	"C2"
B1	PROCESS INLET	6"	150#	RFWN	40S	SEE DWG	1"	2,8	2" X 5/16"	–	–	1/4	1/8	5/16	5/16
D1	PROCESS OUTLET	10"	150#	RFWN W/ELBOW	40S	8"	SEE DWG	2,7	–	–	–	1/4	1/4	–	–
D2	PROCESS OUTLET	10"	150#	RFWN W/ELBOW	40S	8"	SEE DWG	2,7	–	–	–	1/4	1/4	–	–
D3	PROCESS OUTLET	8"	150#	RFWN W/ELBOW	40S	8"	SEE DWG	2,7	–	–	–	1/4	1/4	–	–
D4	DRAIN	8"	150#	RFWN	40S	6"	–	2,5	2" X 1/4" SEE DWG	–	–	1/4	1/2	1/4	1/4
D5	OVERFLOW	6"	150#	RFWN	40S	6"	1"	2,7	–	–	–	1/4	1/4	–	–
D6	PROCESS OUTLET	10"	150#	RFWN W/ELBOW	40S	8"	SEE DWG	2,7	–	–	–	1/4	1/4	–	–
D7	PROCESS OUTLET	10"	150#	RFWN W/ELBOW	40S	8"	SEE DWG	2,7	–	–	–	1/4	1/4	–	–
L1	LEVEL	3"	150#	SP. STUDPAD	–	–	–	13	–	–	–	1/4	1/8	–	–
L2	LEVEL	3"	150#	SP. STUDPAD	–	–	–	13	–	–	–	1/4	1/8	–	–
X1	INSPECTION HATCH	12"	150#	RFWN W/BLIND	40S	SEE DWG	1"	2,8	3" X 5/16"	–	–	1/4	1/8	5/16	5/16
M2	MANWAY	30"	–	CM-2	1/4"	4"	SEE DWG	8	5" X 1/4"	–	–	1/4	1/4	1/4	1/4
V1	VENT	4"	–	PIPE W/ELBOWS	40S	12"	–	5	2" X 5/16"	–	–	1/4	1/8	5/16	5/16

MATERIALS OF CONSTRUCTION

	VESSEL
SHELL	SA240-304/304L
TOP CONE/FLAT BOTTOM	SA240-304/304L
RIM ANGLE	SA479-304/304L
NOZZLE NECKS	SA312-304/304 WLD & SA403-304/304L WPB
NOZZLE FLANGES	SA182F-304/304L
MANWAY NECKS	SS304
MANWAY FLANGES	SS304
MANWAY GASKETS	BUNA-N
BOLTS/STUDS (NOZZLE)	SA193-B8 (TEFLON COATED)
NUTS (NOZZLE)	SA194-8 (TEFLON COATED)
GASKET (NOZZLE)	GARLOCK 3000
REPADS	SA240-304/304L
COUPLINGS	–
SUPPORTS/HOLD DOWNS	SA240-304/304L
LIFTING/TAILING LUGS	SA240-304/304L
STUDPAD	SA240-304/304L OR SA182F-304/304L
INSULATION RINGS	–
GROUND LUG	SA240-304/304L
BAFFLE	–
LADDER	–
TANK CLIPS (LADDER)	–
HANDRAIL	–
HANDRAIL CLIPS	–
PLATFORM	–
PLATFORM CLIPS	–
DIPTUBE SUPPORT	–
JACKET SHELL	–
JACKET HEADS	–
JACKET NOZZLE NECKS	–

DESIGN DATA

	VESSEL
DESIGN AND FAB. CODE	API650
CERT. STAMP REQ'D.	NO
DESIGN PRESSURE	ATM
DESIGN TEMPERATURE	150° F
MIN. DESIGN METAL TEMP.	-20° F @ ATM
OPERATING PRESSURE	ATM
OPERATING TEMPERATURE	90° F
JOINT EFFICIENCY HEADS	0.70
JOINT EFFICIENCY SHELL	0.70
CORROSION ALLOWANCE	0"
SPECIFIC GRAVITY	1.0
EARTHQUAKE ZONE	Ss = (0.526) S1 = (0.23)
WIND LOAD	99 MPH
STRESS RELIEF	NOT REQ'D
RADIOGRAPHIC EXAM	NOT REQ'D
DYE PENETRANT EXAM	NOT REQ'D
MAGNETIC PARTICLE EXAM	NOT REQ'D
HYDROSTATIC TEST	–
PNEUMATIC TEST	2 PSIG/ GAUGE #1
JKT DESIGN AND FAB. CODE	–
JKT CERT. STAMP REQ'D.	–
JKT DESIGN PRESSURE	–
JKT DESIGN TEMPERATURE	–
JKT MIN. DESIGN METAL TEMP.	–
JKT OPERATING PRESSURE	–
JKT OPERATING TEMPERATURE	–
JKT JOINT EFFICIENCY HEADS	–
JKT JOINT EFFICIENCY SHELL	–
JKT HYDRO TEST	–

VESSEL FINISH

INTERIOR WELD TREATMENT:	SAV TANK STANDARD
EXTERIOR WELD TREATMENT:	SAV TANK STANDARD
SAV TANK FINISHING STANDARD:	SEE NOTE 6
INSULATION:	N/A
PAINTING:	N/A

VESSEL CAPACITY AND WEIGHTS

OPERATING CAPACITY	TBD
FULL CAPACITY	32,700 GAL.
EMPTY SHIPPING WEIGHT	20,700 LBS.
WEIGHT FULL OF WATER	293,600 LBS.
WEIGHT FULL OF PRODUCT	293,600 LBS.

QUALITY CONTROL

ENG. _____ DATE: _____

Q.C. _____ DATE: _____

This drawing is issued for customer approval. please review, make approval changes (if any) in red. check the appropriate box, sign & date.

- ☐ Approval – no changes. Please proceed with fabrication.
- ☐ Approved as noted. Please proceed with fabrication
- ☐ Not approved. Please make changes and resubmit.

Customer signature _____ Date _____

GENERAL NOTES

1.) COVER ALL FLANGES, OPENINGS & MACHINED SURFACES PRIOR TO SHIPMENT UNLESS OTHERWISE NOTED.
2.) BOLT HOLES TO STRADDLE 0° & 180° UNLESS OTHERWISE NOTED.
3.) NOZZLE REPADS TO HAVE (1) ø1/4" TELL-TALE HOLES ON HORIZONTAL CENTER LINE.
ALL OTHER REPADS TO HAVE (1) ø1/4" WEEP HOLE AT LOWEST POINT ON PAD.
4.) MANUFACTURING TOLERANCE TO BE IN ACCORDANCE WITH API STANDARD 650 7.5.
5.) ASME MATERIALS TO CONFORM TO THE FOLLOWING: FLANGES – B16.5, FITTINGS – B16.9 & COUPLINGS – B16.11.
6.) PICKLE ALL EXTERIOR WELDS. PASSIVATE INTERIOR & EXTERIOR OF VESSEL.

△1 REVISIONS

REV	D.BY	C.BY	DATE	DESCRIPTION
				AS BUILT
2	AD	RS	8/28/25	CERTIFIED REV 1
1	RS	NP	6/23/25	CERTIFIED
0	AD	RS	5/5/25	APPROVAL

Savannah Tank & Equipment Corp.
1517 Telfair Road, Savannah, GA 31415
(912) 233-8902

DRAWN BY: AD
CHK'D BY: RS
APPROVED BY: NP
SCALE: 1/4" = 1'-0"

KIMBERLY CLARK
FRESH WATER TANK
EQUIP. #861-TK-86101
CUST. PO #C000139275

DRAWING NO.: 021-25-1 SHT 1 OF 4 REV. SET 2

FC-14

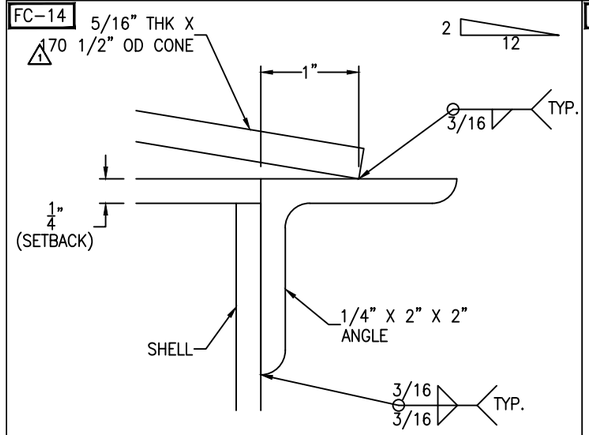

RIM ANGLE DETAIL

SCALE: 1'-0" = 1'-0"

FC-14

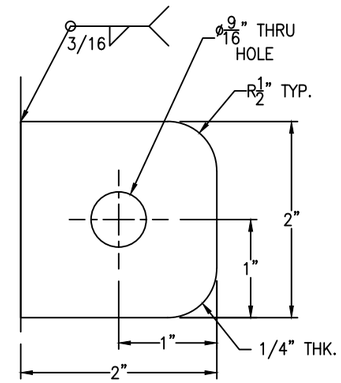

GROUND LUGS ARE LOCATED @ 70° AND 250°

GROUND LUG DETAIL

(2 REQ'D) SCALE: 1'-0" = 1'-0"

FC-14

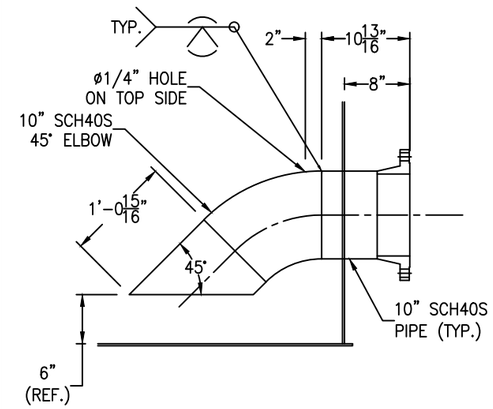

NOZ. D1, D2, D6, D7 DETAIL

(4 REQ'D) SCALE: 1" = 1'-0"

FC-14

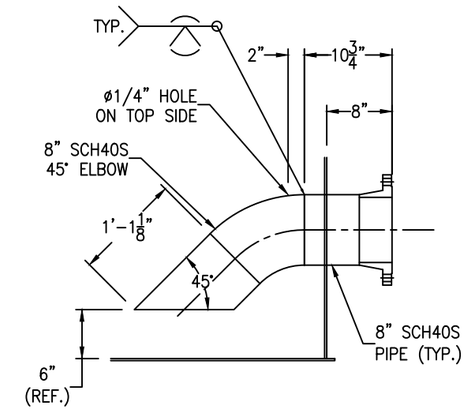

NOZ. D3 DETAIL

SCALE: 1" = 1'-0"

FC-14

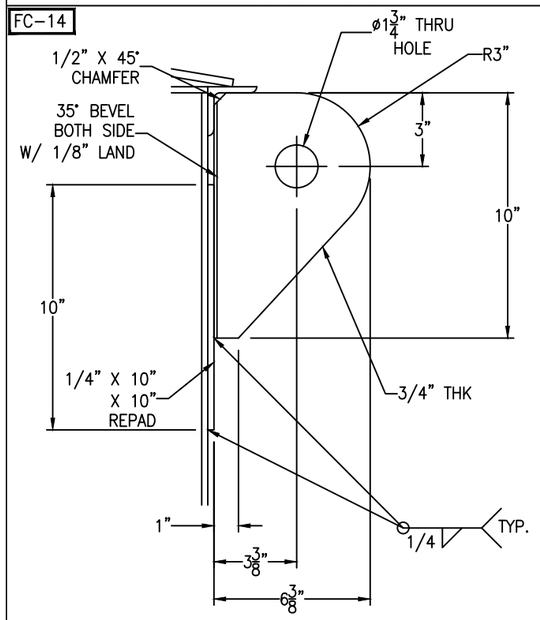

TANK WT. <= 30000#
SHACKLE PIN DIA. = 1 5/8"

LIFT LUG DETAIL

(2 REQ'D) SCALE: 3" = 1'-0"

FC-14

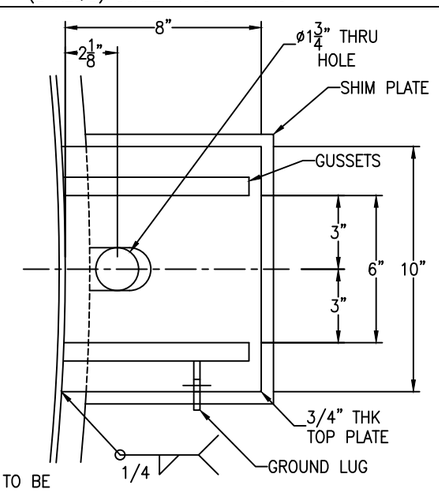

SHIM PLATE TO BE SHIPPED LOOSE

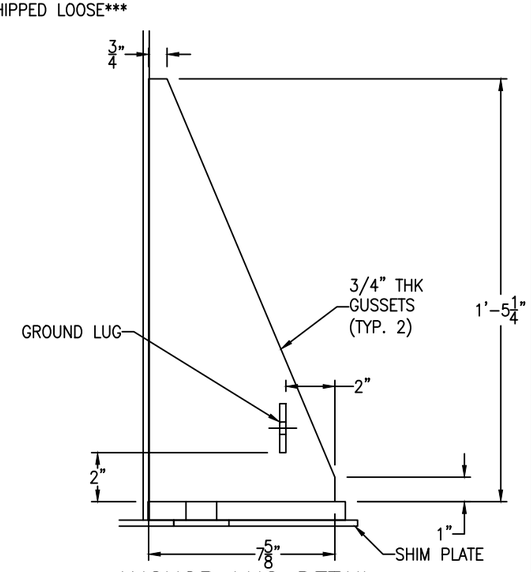

ANCHOR LUG DETAIL

(6 REQ'D) SCALE: 3" = 1'-0"

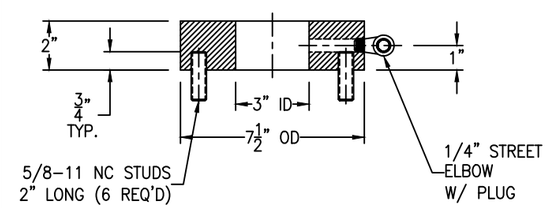

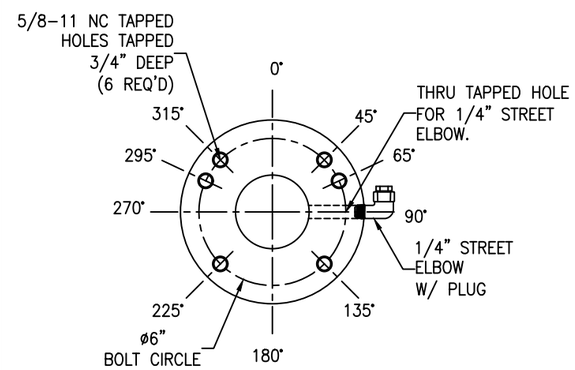

SPECIAL STUDPAD L1 & L2 DETAIL

(2 REQ'D) SCALE: 3" = 1'-0"

FC-14

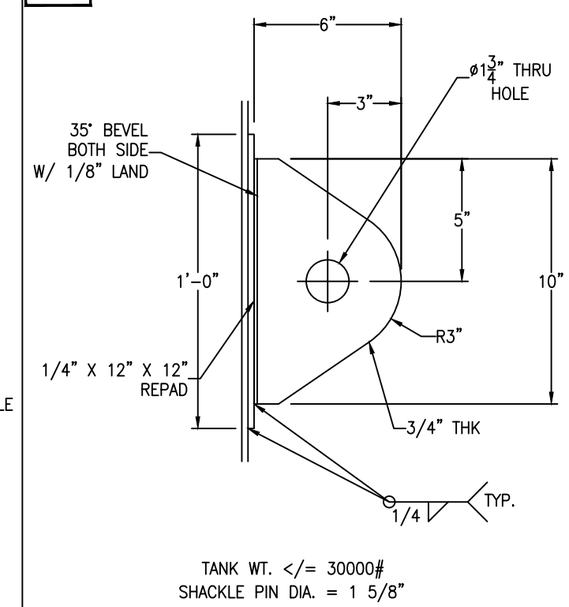

TANK WT. <= 30000#
SHACKLE PIN DIA. = 1 5/8"

TAIL LUG DETAIL

SCALE: 3" = 1'-0"

FC-14

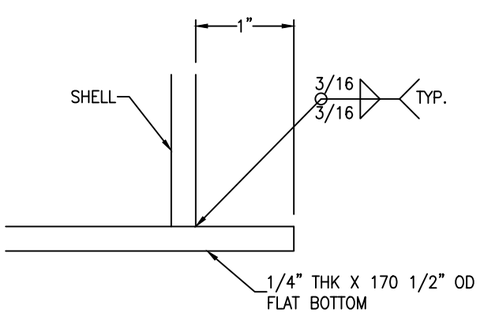

FLAT BOTTOM DETAIL

SCALE: 1'-0" = 1'-0"

REV	D.BY	C.BY	DATE	DESCRIPTION
				AS BUILT
2	AD	RS	8/28/25	CERTIFIED REV 1
1	RS	AD	6/23/25	CERTIFIED
0	AD	RS	5/5/25	APPROVAL

⚠ REVISIONS

Savannah Tank & Equipment Corp.
1517 Telfair Road, Savannah, GA 31415
(912) 233-8902

DRAWN BY: AD
CHK'D BY: RS
APPROVED BY: NP
SCALE: 1/4" = 1'-0"

KIMBERLY CLARK
FRESH WATER TANK
EQUIP. #861-TK-86101
CUST. PO #C000139275

DRAWING NO.: 021-25-2 SHT 2 OF 4 REV. SET 2

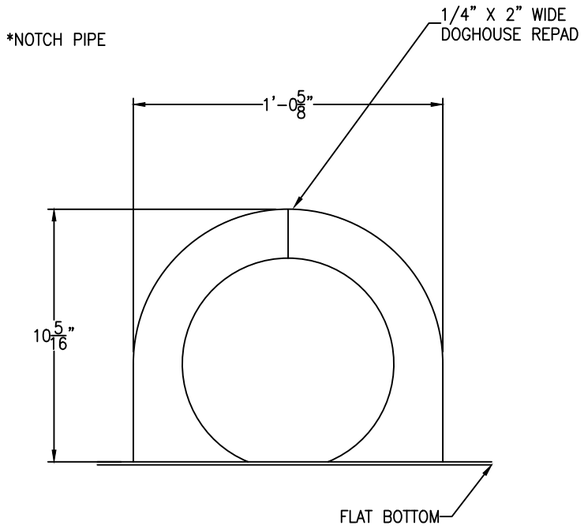

*FLANGE NOT SHOWN FOR CLARITY PURPOSE

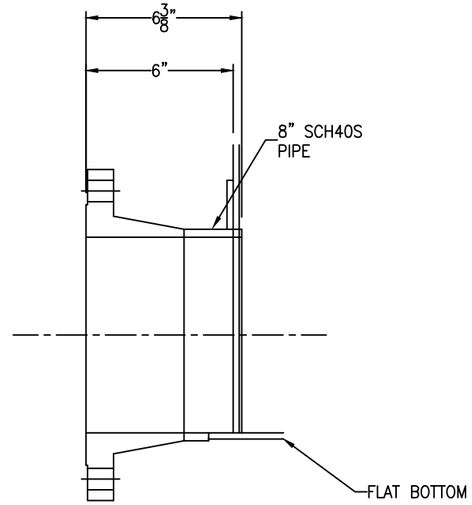

NOZZLE D4 DETAIL

SCALE: 3" = 1'-0"

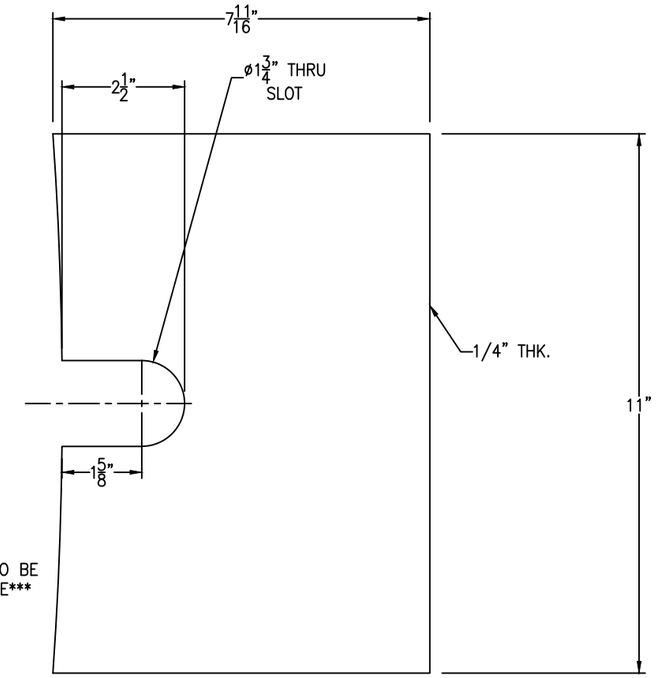

***SHIM PLATE TO BE
SHIPPED LOOSE***

SHIM PLATE DETAIL

(6 REQ'D) SCALE: 6" = 1'-0"

FC-14

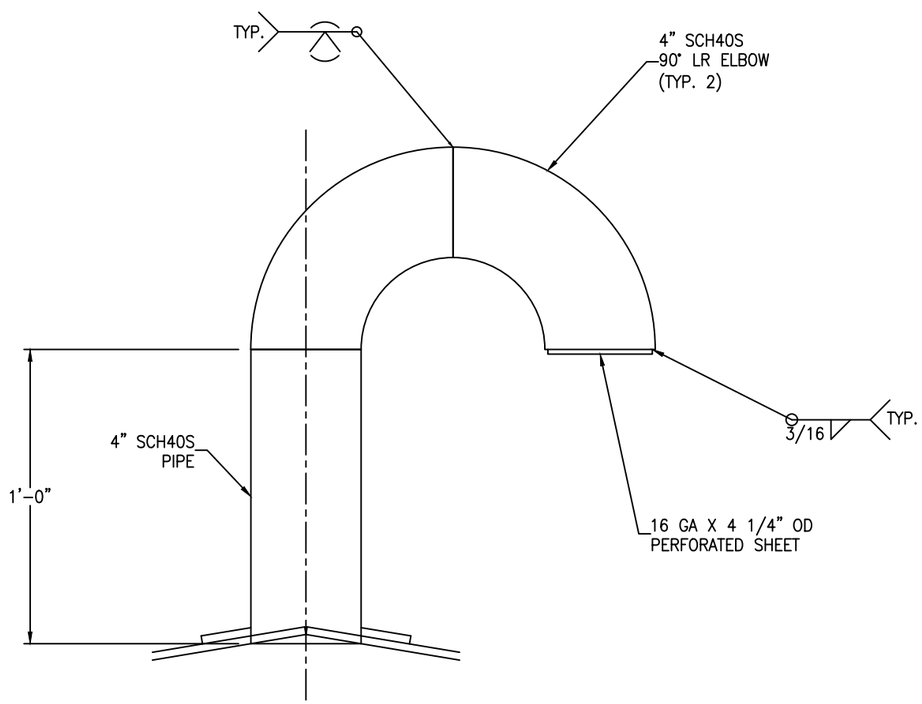

NOZZLE V1 DETAIL

SCALE: 3" = 1'-0"

REV	D.BY	C.BY	DATE	DESCRIPTION
				AS BUILT
2	AD	RS	8/28/25	CERTIFIED REV 1
1	RS	NP	6/23/25	CERTIFIED
0	AD	RS	5/5/25	APPROVAL

⚠ REVISIONS

Savannah Tank & Equipment Corp.
1517 Telfair Road, Savannah, GA 31415
(912) 233-8902

DRAWN BY: AD
CHK'D BY: RS
APPROVED BY: NP
SCALE: 1/4" = 1'-0"

KIMBERLY CLARK
FRESH WATER TANK
EQUIP. #861-TK-86101
CUST. PO #C000139275

DRAWING NO.: 021-25-3 SHT 3 OF 4 REV. SET 2

Bolting for blinds
X1: (12) 7/8-9 NC x 5 1/2" FULL THREADED STUD
(24) 7/8-9 NC HH NUT
(1) 12" 150# RING GASKET X 1/8" THK
(48) BELLEVILLE WASHERS (17-7 STAINLESS STEEL)

Bolting for hinge
(2) 1/2-13 NC x 1 1/2" HH BOLT
(2) 1/2-13 NC HH NUT

FC-14

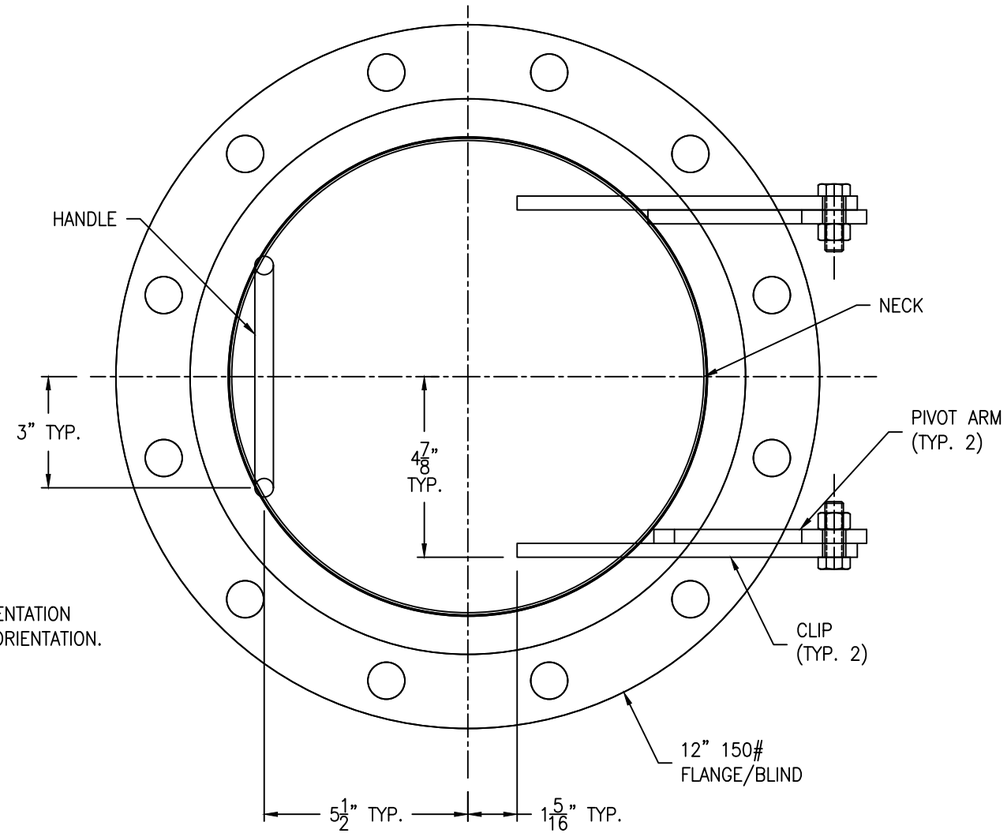

*NOTE: PLEASE CONFIRM THE ORIENTATION FOR HINGE. SEE SHEET #1 FOR ORIENTATION.

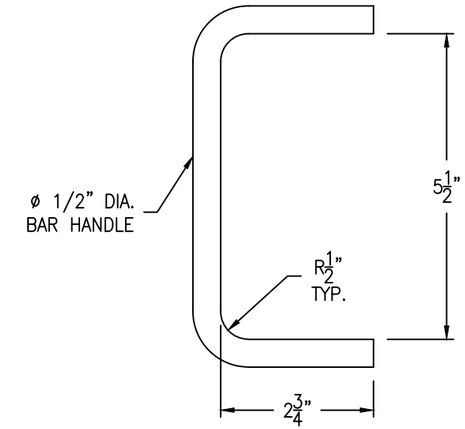

HANDLE DETAIL

(1 REQ'D) SCALE: 6" = 1'-0"

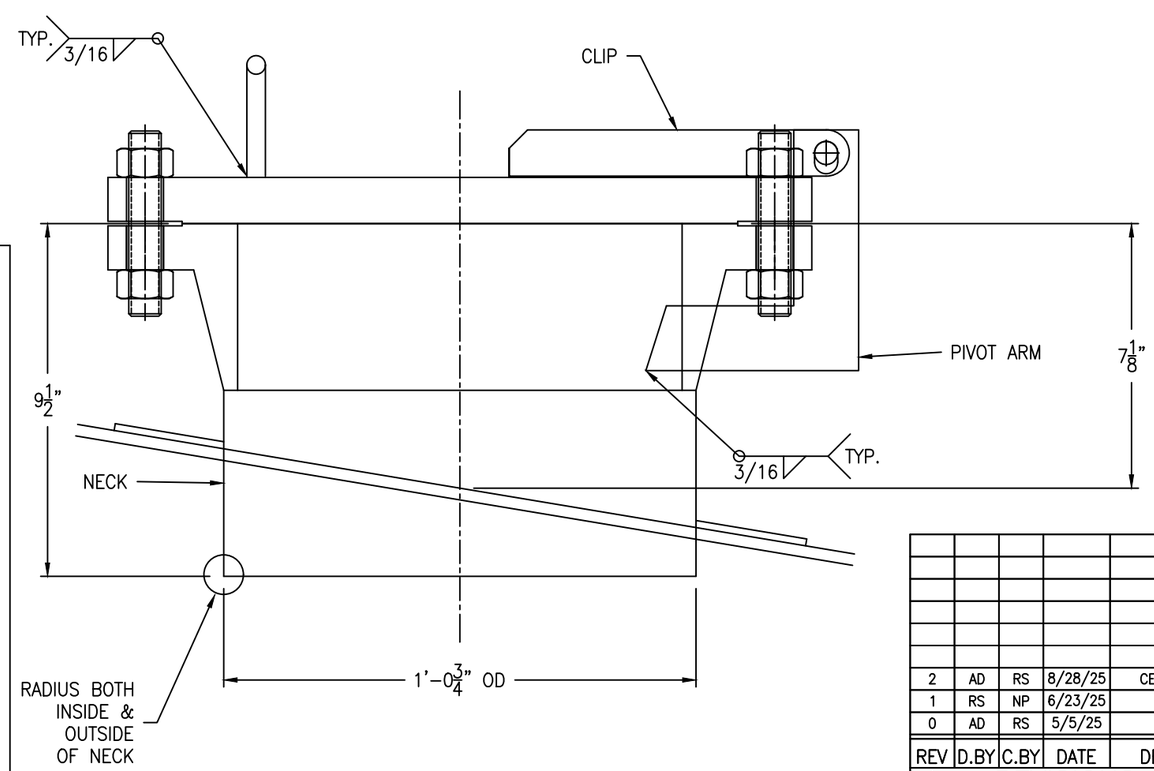

(1 REQ'D) SCALE: 4" = 1'-0"

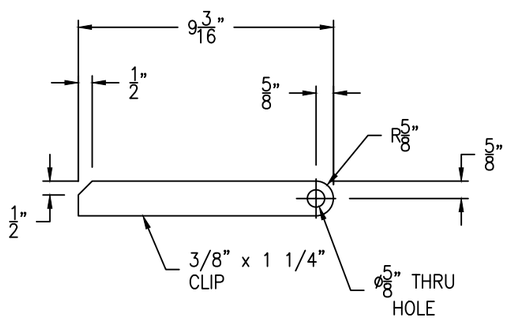

CLIP DETAIL

(2 REQ'D) SCALE: 3" = 1'-0"

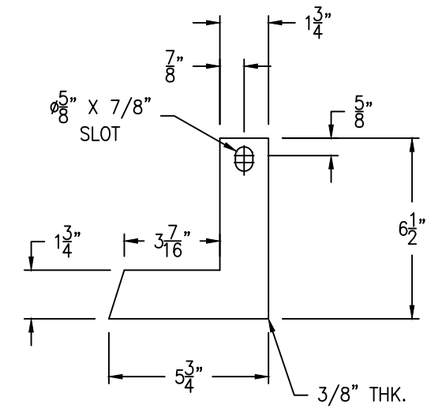

PIVOT ARM DETAIL

(2 REQ'D) SCALE: 3" = 1'-0"

REV	D.BY	C.BY	DATE	DESCRIPTION
				AS BUILT
2	AD	RS	8/28/25	CERTIFIED REV 1
1	RS	NP	6/23/25	CERTIFIED
0	AD	RS	5/5/25	APPROVAL

⚠1 REVISIONS

Savannah Tank & Equipment Corp.
1517 Telfair Road, Savannah, GA 31415
(912) 233-8902

DRAWN BY: AD
CHK'D BY: RS
APPROVED BY: NP
SCALE: 2" = 1'-0"

KIMBERLY CLARK
FRESH WATER TANK
EQUIP. #861-TK-86101
CUST. PO #C000139275

DRAWING NO.: 021-25-4 SHT 4 OF 4 REV. SET 2